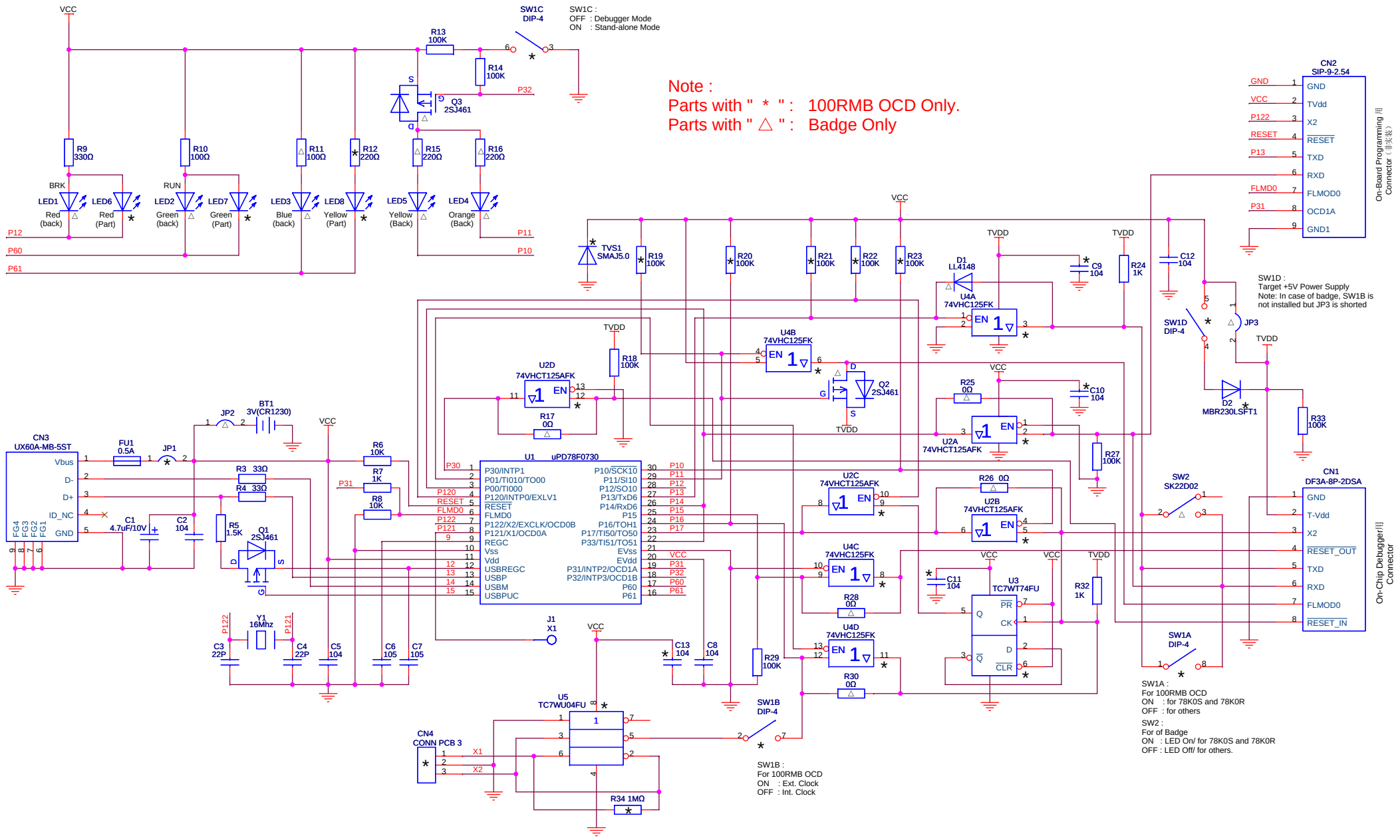

Title	<Title>	USB_OCD 2007	
Size A3	Document Number <Doc>	NEC Electronics Hong Kong Ltd.	Rev V.1
Date: Saturday, October 06, 2007	Sheet 1 of 1		