www.8051faq.com.cn TEL:0755-61361234

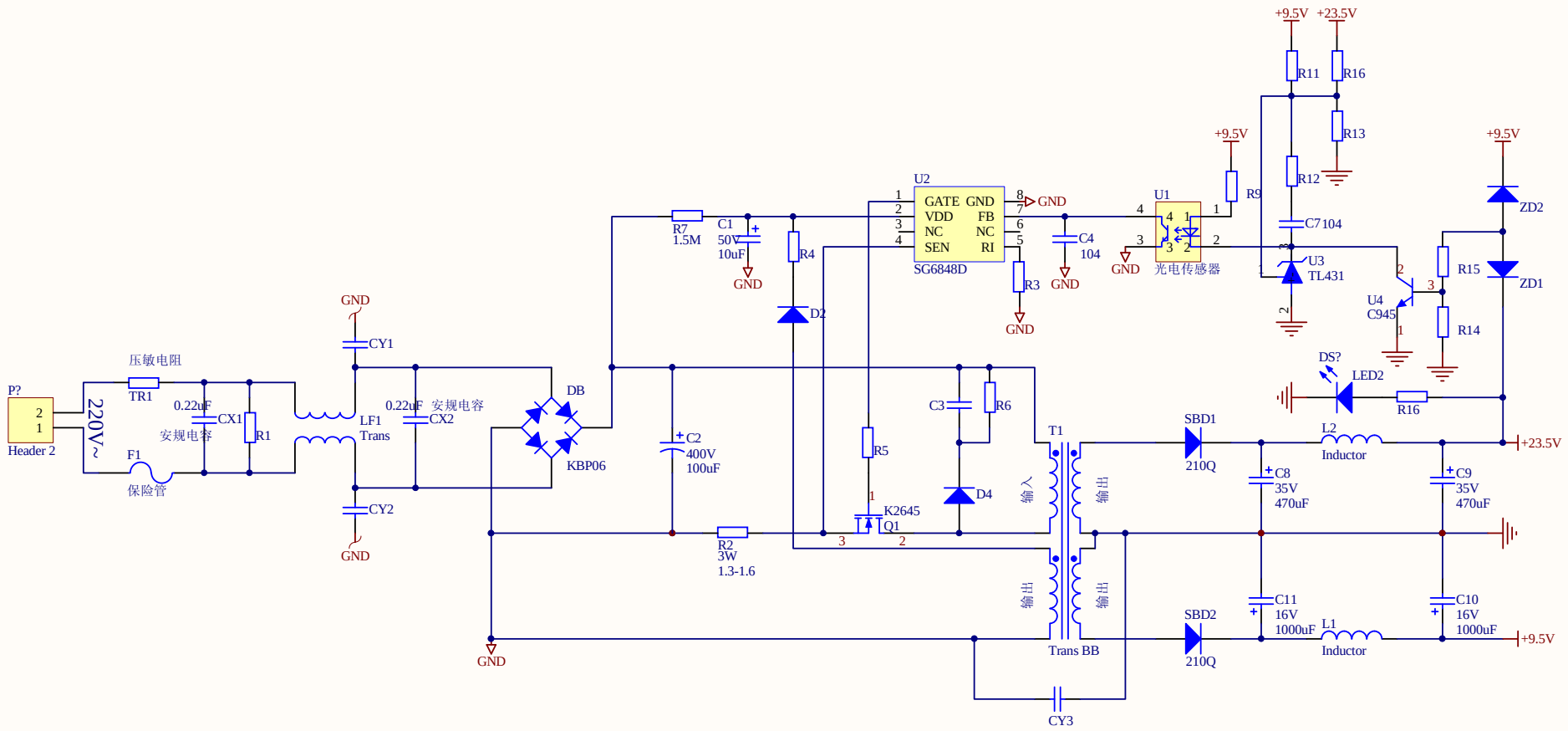

Title		
Size A4	Number	Revision
Date: 2007-12-17		Sheet of
File: G:\电路图\河洛电源\拷贝机.SCHDOC		Drawn By: