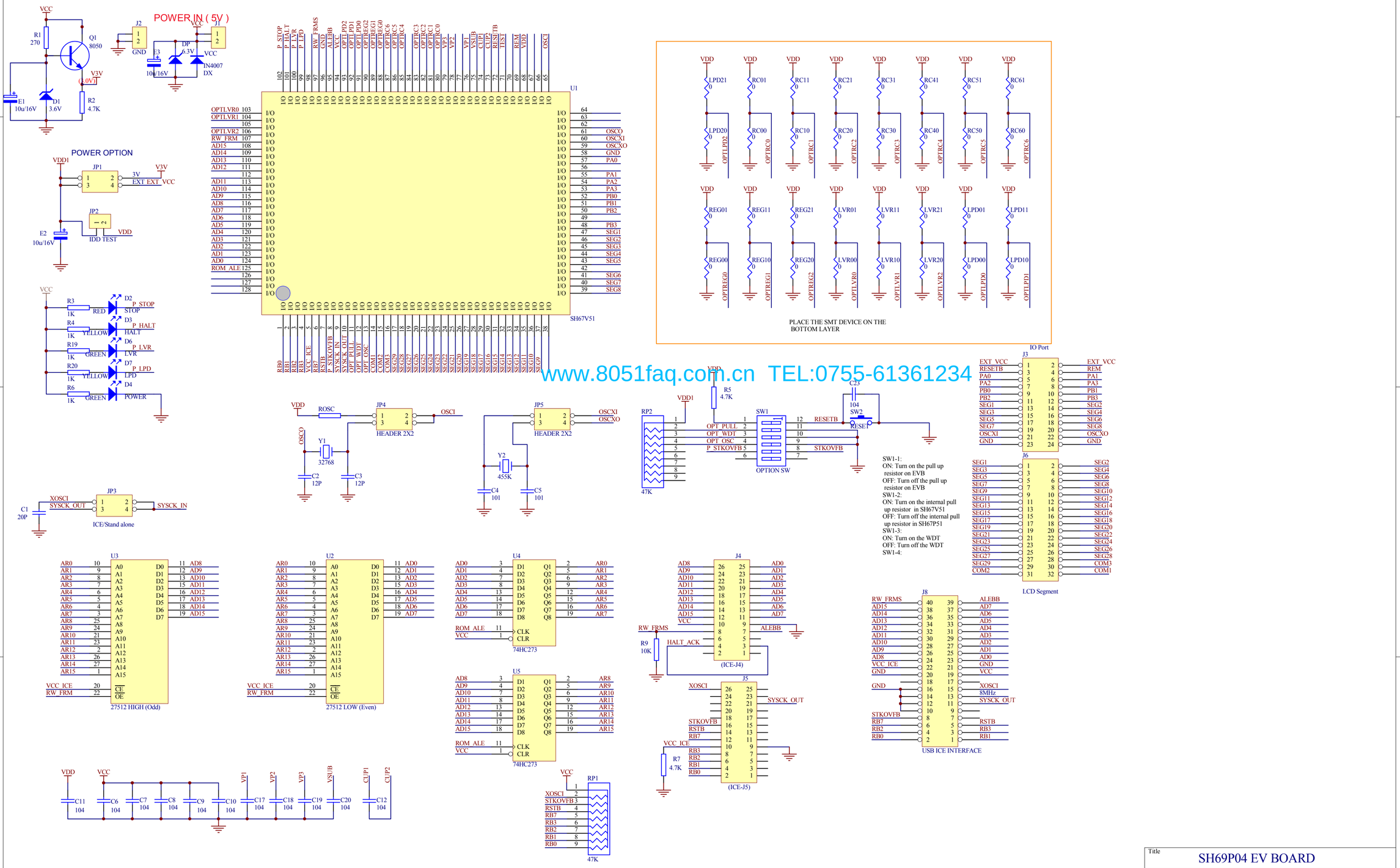

www.8051faq.com.cn TEL:0755-61361234

Title	SH69P04 EV BOARD	
Size C	Number	Revision 0.1
Date: 25-Sep-2007	Sheet of	
File: D:\PROGRAM FILES\DESIGN EXPLORER 99\EXAMPLES\SH69P04.DDB		