| REVISIONS | | | | | |
|---|---|---|---|---|---|
| LTR | ECN | DESCRIPTION | DATE | DWG | APVD |
| | | | | | |
| | | | | | |

When mounting the socket onto burn-in board, pull down the lead-guide as shown on the side view bellow.
And align the positioning pins with the through holes of the burn-in boards properly. Press the socket down from the top evenly and gradually until the socket base stand-off lie on the burn-in board.

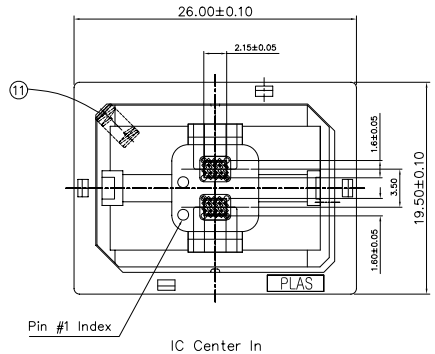


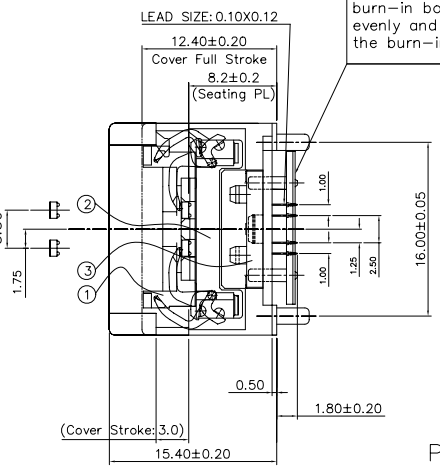


| General Spec. of Socket. (Any IC Socket can be made in general Spec.) | |
|---|---|
| 1. Socket Pitch | 0.50 x 0.50 |
| 2. Socket Size | 19.5 x 26.0 |
| 3. Full Matrix | 20 x 20 |
| 4. Max IC Size | 11.5 x 18.0 |
| 5. Solder Ball Size (Can be covered) | ø0.30±0.05 |

IC Dimension (Scale :2/1)

0.5 Pitch dBGA-8-1.5x2.0

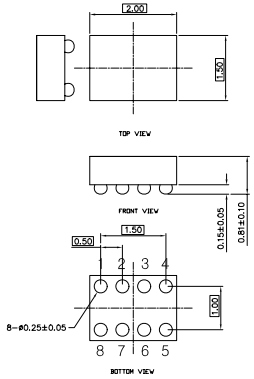


| DRAWN | DATE | DWG NO |
|---|---|---|
| | | |

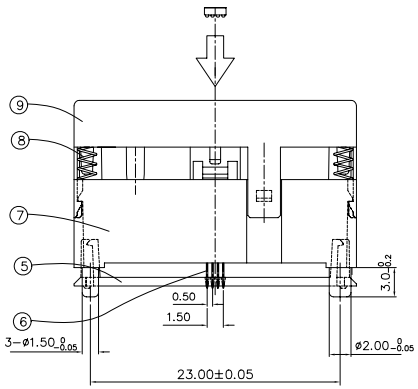


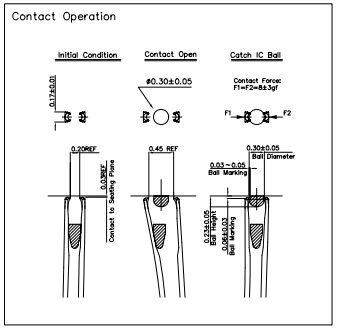


PCB Layout(TOP VIEW)

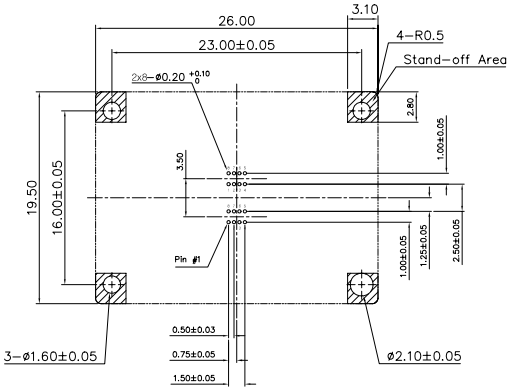


www.8051faq.com.cn TEL:0755-61361234

Operating Method

1. IC Inserting Operation
   (a) Push the cover all the way down(3mm) until it stops then insert the IC on top of Adapter Part NO 1.
   When inserting the IC PKG it's center should not be the same as that of the socket.
   (b) To lock the IC in place, release the cover.

2. IC Removing Operation
   Push the cover all the way down(3mm) until it stops then take the IC out.
   (When the cover is pushed down, a vacuum method can be used to pull out the IC.)

UNLESS OTHERWISE SPECIFIED
LINEAR TOLERANCE ±0.10
ANGLE = ±1°
ALL DIM ARE IN MILLIMETERS

| SCALE | 1/1 | DATE |
|---|---|---|
| DWN | D.W.Hwang | 06/03/'04 |
| CHK | | |
| ENGR | | |
| APPVD | | |

SIZE C | DWG NO. 008MG50D32020 | REV | SH

TITLE
BGA SOCKET
1.5mmx2.0mm/0.50mm PITCH
2-3x4 GRID PATTERN

PLASTRONICS
2601 TEXAS DRIVE
IRVING, TX. 75062