Figure 3-17. TL16C552A Circuit Connection Example

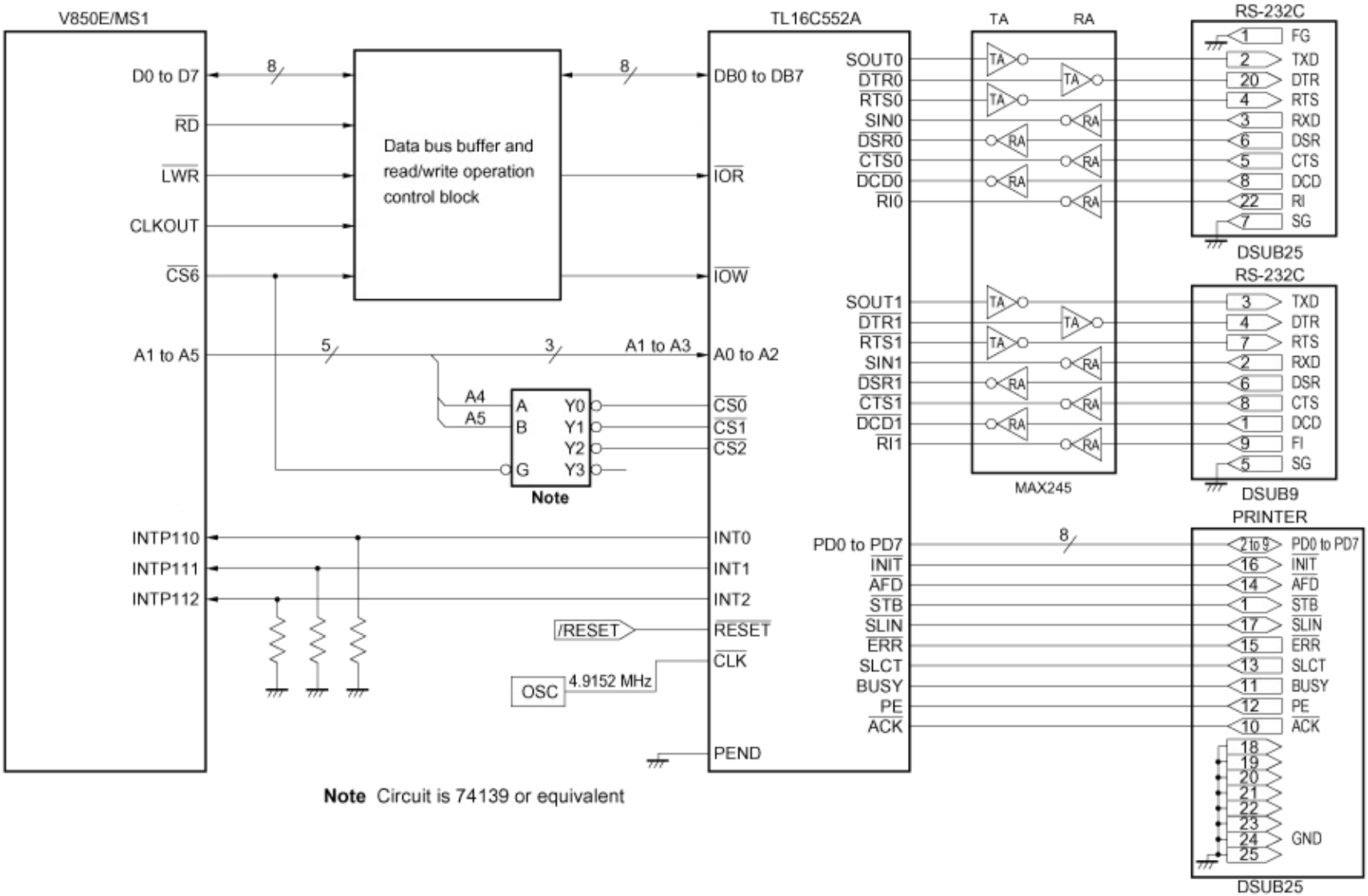

Note Circuit is 74139 or equivalent