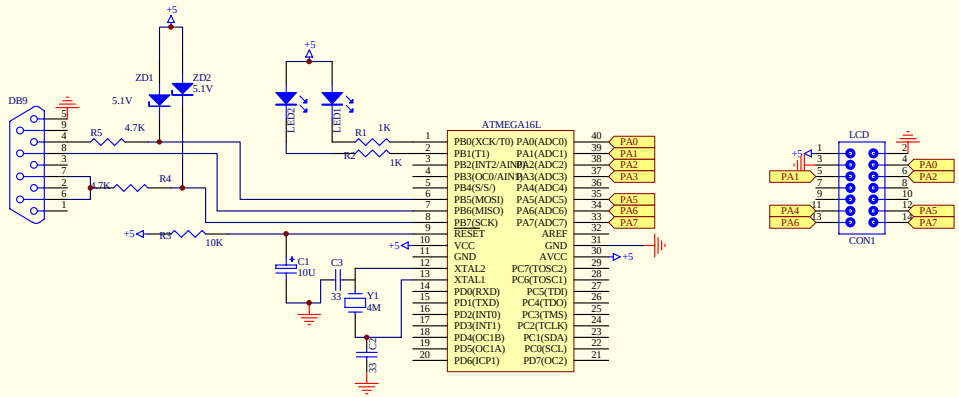

Title		
Size B	Number	Revision
Date: 3-Nov-2006	Sheet of	
File: D:\PROGRAM FILES\EXAMPLES\ATMEGA16.DDB	Drawn by:	